ASSEMBLE TOOL APPLICABLE OUTER CONDUCTOR CRIMPING TOOL : HT103/MRF01-J-178
TOOL FOR PRESS FITTING OF DISK : MMCX-LP/PR-MP

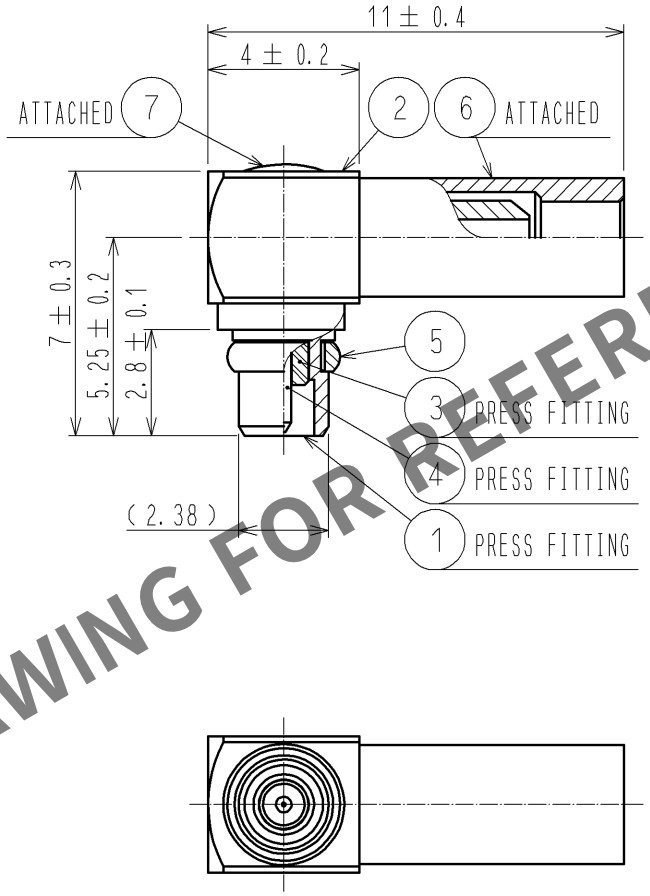

HRS DRAWING FOR REFERENCE

RoHS COMPLIANT

NO.	MATERIAL	FINISH , REMARKS	NO.	MATERIAL	FINISH , REMARKS
4	PHOSPHOR BRONZE	GOLD PLATING			
3	PTFE		7	BRASS	GOLD PLATING
2	BRASS	GOLD PLATING	6	COPPER	GOLD PLATING
1	BRASS	GOLD PLATING	5	BERYLLIUM COPPER	GOLD PLATING

UNITS mm	SCALE 5 : 1	COUNT	DESCRIPTION OF REVISIONS	DESIGNED	CHECKED	DATE

HIROSE ELECTRIC CO., LTD.

APPROVED	: MH. YAMANE	10. 10. 27	DRAWING NO.	EDC4-303198-40
CHECKED	: TS. NOBE	10. 10. 27	PART NO.	MMCX-LP-088(40)
DESIGNED	: NK. OOSAWA	10. 10. 26	CODE NO.	CL339-0020-1-40
DRAWN	: NK. OOSAWA	10. 10. 26		1/1

FORM HC0011-5-51

Aug.1.2024 Copyright 2024 HIROSE ELECTRIC CO., LTD. All Rights Reserved.
In case of consideration for using Automotive equipment / device which demand high reliability, kindly contact our sales window correspondents.