THIS DRAWING IS UNPUBLISHED. RELEASED FOR PUBLICATION 2015
© COPYRIGHT 2012 BY TE CONNECTIVITY ALL RIGHTS RESERVED.

LOC	DIST

REVISIONS

P	LTR	DESCRIPTION	DATE	DWN	APVD
	A	REVISED PER ECO-14-019072	23FEB2015	JA	DM
	A1	REVISED PER ECO-16-013285	08SEP2016	DD	DM
	A2	REVISED PER PCN-24-200566	19FEB2024	CO	CB
	A3	REVISED PER PCN-24-213773	02JUL2024	HD	CB

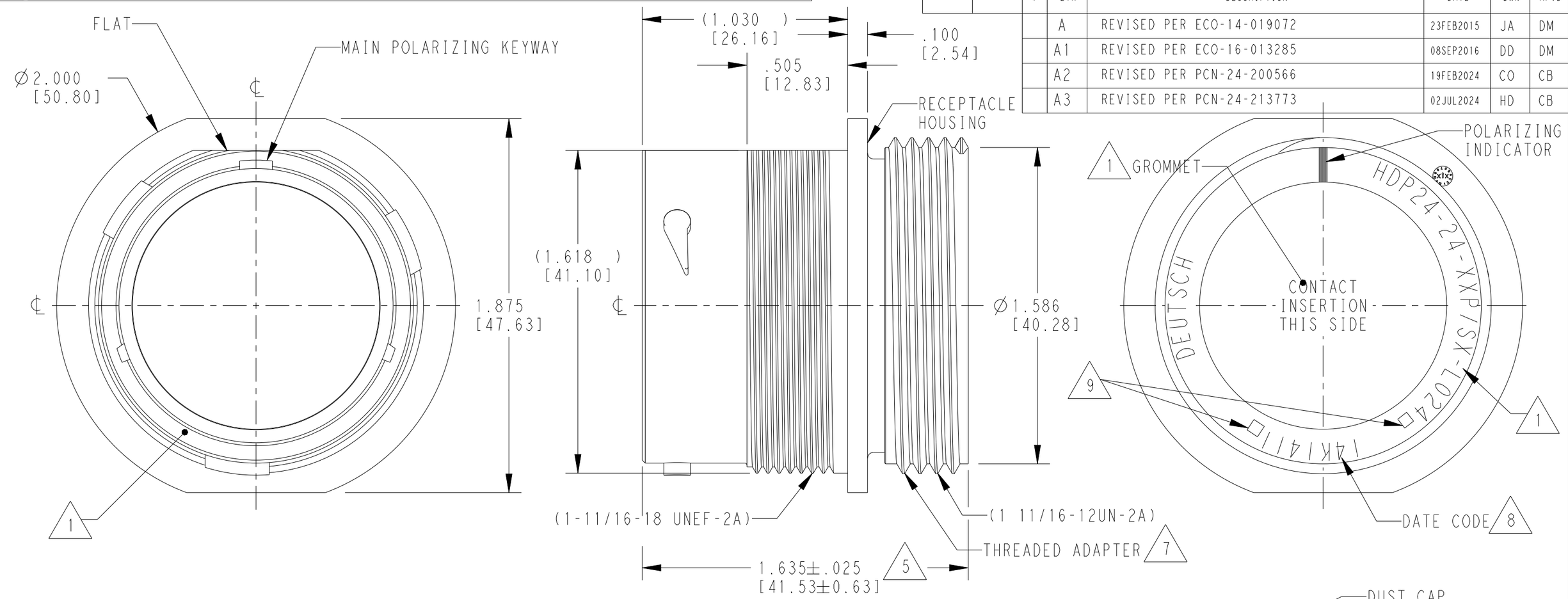

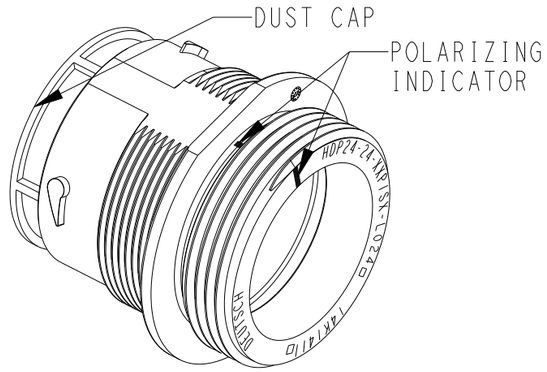

SCALE 1:1

6. RECEPTACLE IS SUPPLIED WITH DUST CAP (2415-001-2405)

5 NOTED DIMENSION DOES NOT INCLUDE GROMMET PROTRUSION.

4 MATERIAL: RECEPTACLE HOUSING: PA66 GF10 (BLACK)
THREADED ADAPTER: PA66 GF10 (GREEN, GRAY, BLUE)
GROMMET: SILICONE (ORANGE-RED)

3 SEE 0425-021-0000 APPLICATION SPECIFICATION
A. RECOMMENDED WIRE INSULATION RANGE
B. CONTACT REMOVAL TOOLS
C. RECOMMENDED MOUNTING HOLE & PANEL THICKNESS
D. MOUNTING HARDWARE & MOUNTING TORQUE.

2. THIS RECEPTACLE MATES WITH HDP26-24-XXP/SX-XXXX PLUG
X = SEAL TYPE (N,T,E)
XX = INSERT ARRANGEMENT
XXXX = MODIFICATION

1 SEE CUSTOMER DRAWING, 0425-014-2400 FOR AVAILABLE INSERT ARRANGEMENTS AND PART NUMBERS.

NOTES:

9 LOCATIONS FOR TRACEABILITY WITNESS MARKS ONLY

8 DATE CODE: IDENTIFIES THE YEAR, MONTH, DAY AND HOUR OF ASSEMBLY.
YEAR: FIRST AND SECOND DIGITS. (14 = 2014)
MONTH: THRID DIGIT, EXCLUDING I. A = JAN., B = FEB., C = MARCH.... (K = OCTOBER)
DAY: FOURTH AND FIFTH DIGITS (14 = 14th DAY)
HOUR: SIXTH AND SEVENTH DIGITS (11 = 11AM)

7 PART MODIFICATION: THREADED ADAPTER
ACCEPT BACKSHELL: 2428-024-2405

THIS DRAWING IS A CONTROLLED DOCUMENT.

DIMENSIONS: INCHES[mm]

TOLERANCES UNLESS OTHERWISE SPECIFIED:
0 PLC ±
1 PLC ±
2 PLC ±
3 PLC ±.015 [0.38]
4 PLC ±
ANGLES ±0°30'0"

MATERIAL 4

FINISH N/A

DWN 13JUL2012 ILINA GRANTCHAROVA
CHK 23AUG2012 ILINA GRANTCHAROVA
APVD 23AUG2012 DAVID MEYER
PRODUCT SPEC 0425-021-0000
APPLICATION SPEC 3
WEIGHT

TE Connectivity

NAME RECEPTACLE, THREADED SIZE 24, -L024 MOD HDP SERIES

SIZE	CAGE CODE	DRAWING NO	RESTRICTED TO
A3	4AFU8	C-HDP24-24-XXP/SX-L024	-

Customer Drawing | SCALE 2:1 | SHEET 1 OF 1 | REV A3

1470-19 (3/11)