Sep.1.2024 Copyright 2024 HIROSE ELECTRIC CO., LTD. All Rights Reserved.
In case of consideration for using Automotive equipment / device which demand high reliability, kindly contact our sales window correspondents.

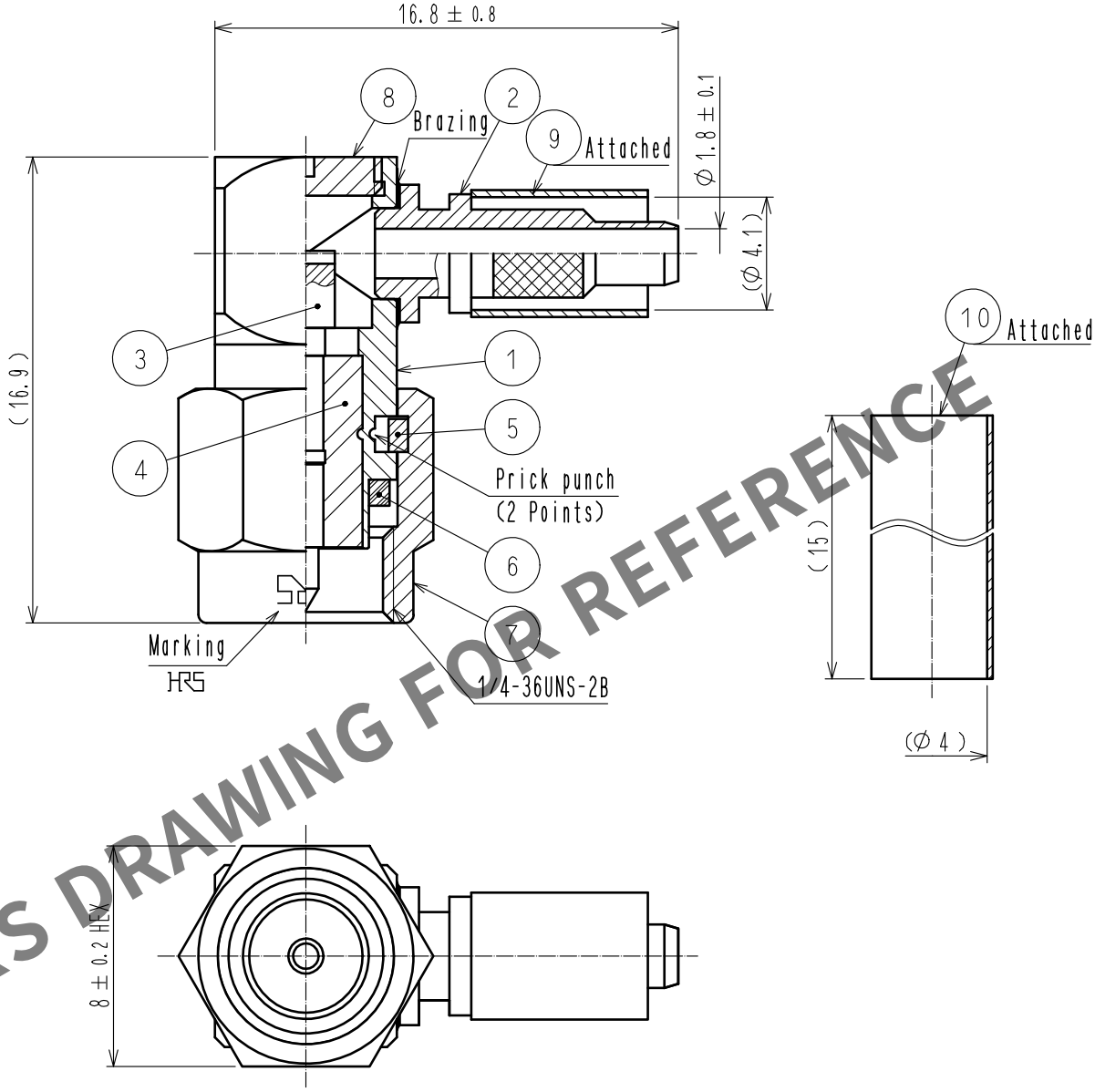

HRS DRAWING FOR REFERENCE

NO.	MATERIAL	FINISH . REMARKS	NO.	MATERIAL	FINISH . REMARKS
5	BERYLLIUM COPPER	NICKEL PLATING	10	POLYOLEFIN	HEAT SHRINK TUBING (BLACK)
4	PTFE		9	COPPER	NICKEL PLATING
3	BRASS	GOLD PLATING	8	BRASS	NICKEL PLATING
2	STAINLESS STEEL	NICKEL PLATING	7	STAINLESS STEEL	PASSIVATE
1	STAINLESS STEEL	NICKEL PLATING	6	SILICONE RUBBER	(RED)

UNITS	SCALE	COUNT	DESCRIPTION OF REVISIONS	DESIGNED	CHECKED	DATE
mm	4 : 1	0				

HIROSE ELECTRIC CO., LTD.

APPROVED	: NK. NINOMIYA	20220221
CHECKED	: NK. NINOMIYA	20220221
DESIGNED	: MT. KANEKO	20220221
DRAWN	: NK. OOSHIMA	20220218

DRAWING NO.	EDC-048774-40-00
PART NO.	HRM-200-4S-1C(40)
CODE NO.	CL0323-0505-5-40

0 1/1

FORM HC0011-5-51