Sep.1.2024 Copyright 2024 HIROSE ELECTRIC CO., LTD. All Rights Reserved.
In case of consideration for using Automotive equipment / device which demand high reliability, kindly contact our sales window correspondents.

ASSEMBLY TOOL: APPLICABLE OUTER CONDUCTOR CRIMPING TOOL HT303/HRM-T-4(58A/U HOLE)

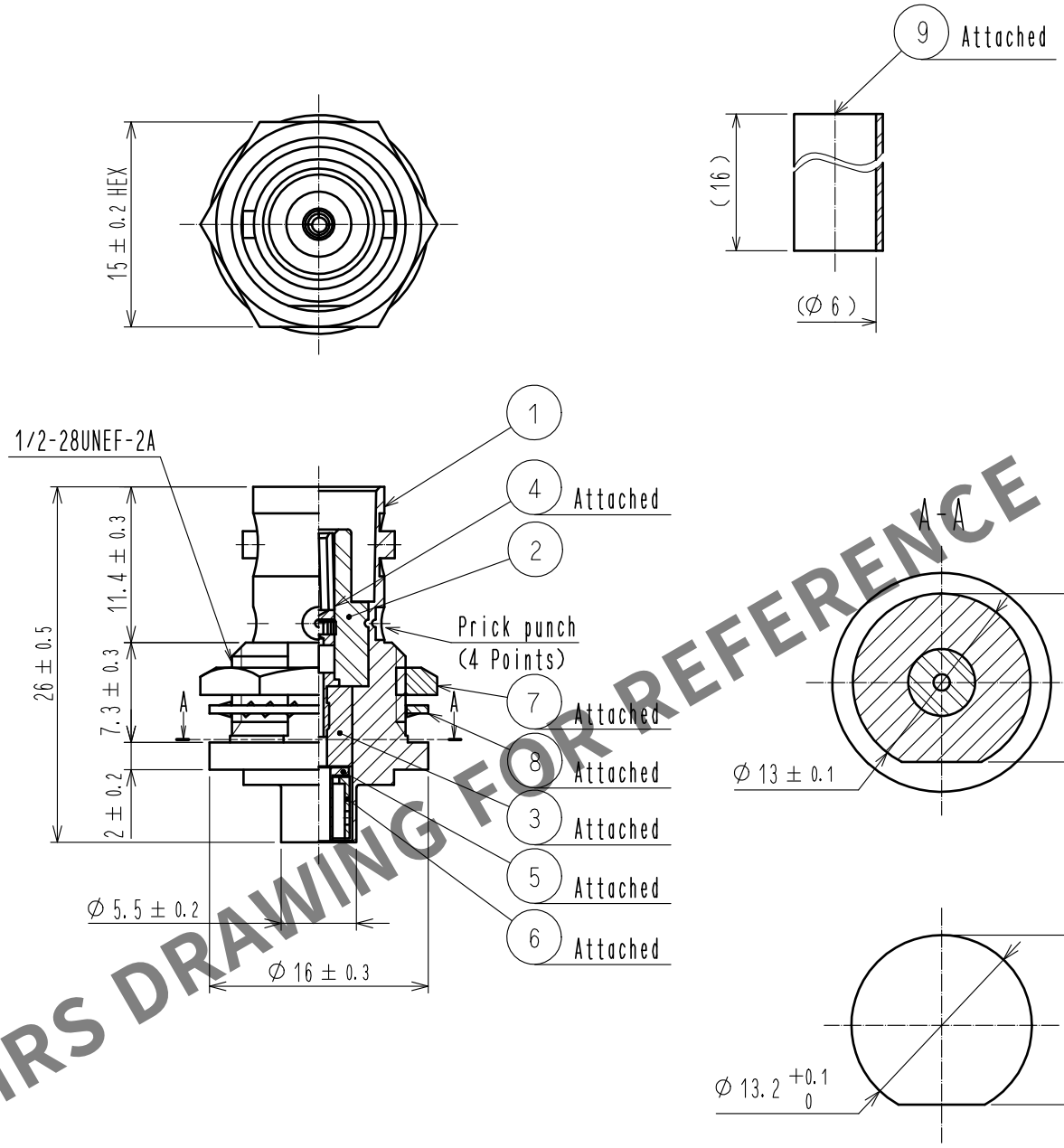

PANEL CUTOUT
(RECOMMENDED PANEL THICKNESS : 1.2~4.1)

NOTE 1. PART NUMBERS ③, ④ ARE ATTACHED AS ONE BLOCK.

NO.	MATERIAL	FINISH . REMARKS	NO.	MATERIAL	FINISH . REMARKS
5	BRASS	NICKEL PLATING			
4	BERYLLIUM COPPER	GOLD PLATING	9	POLYOLEFIN	HEAT SHRINK TUBING
3	PTFE		8	STEEL	NICKEL PLATING
2	PTFE		7	BRASS	NICKEL PLATING
1	BRASS	NICKEL PLATING	6	BRASS	NICKEL PLATING

UNITS mm	SCALE 2 : 1	COUNT	DESCRIPTION OF REVISIONS	DESIGNED	CHECKED	DATE
	0					

HIROSE ELECTRIC CO., LTD.

APPROVED	: NK. NINOMIYA	20211115	DRAWING NO.	EDC-304212-40-00
CHECKED	: NK. NINOMIYA	20211115	PART NO.	BNC-BPJ-1.5DW(40)
DESIGNED	: MT. KANEKO	20211112	CODE NO.	CL0302-0400-6-40
DRAWN	: NK. OOSHIMA	20211112		0 1/1

HRS DRAWING FOR REFERENCE