Sep.1.2024 Copyright 2024 HIROSE ELECTRIC CO., LTD. All Rights Reserved.
In case of consideration for using Automotive equipment / device which demand high reliability, kindly contact our sales window correspondents.

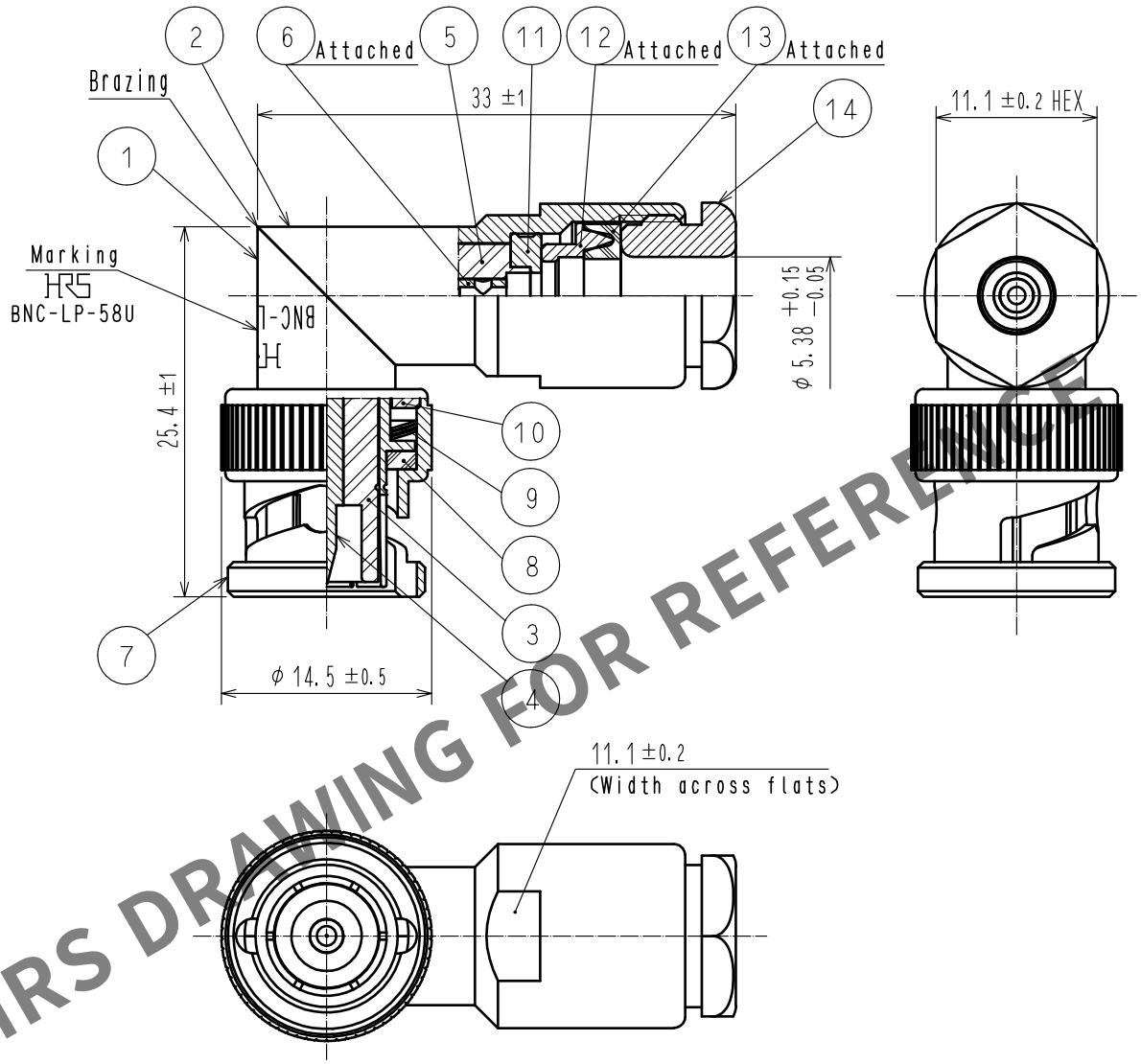

HRS DRAWING FOR REFERENCE

NO.	MATERIAL	FINISH . REMARKS	NO.	MATERIAL	FINISH . REMARKS
7	BRASS	SILVER PLATING	14	BRASS	SILVER PLATING
6	BRASS	SILVER PLATING	13	SILICONE RUBBER	
5	PTFE		12	BRASS	SILVER PLATING
4	BERYLLIUM COPPER	SILVER PLATING	11	BRASS	SILVER PLATING
3	PTFE		10	BRASS	SILVER PLATING
2	BRASS	SILVER PLATING	9	BERYLLIUM COPPER	SILVER PLATING
1	BRASS	SILVER PLATING	8	SILICONE RUBBER	

UNITS mm	SCALE 2 : 1	COUNT	DESCRIPTION OF REVISIONS	DESIGNED	CHECKED	DATE
		0				

HIROSE ELECTRIC CO., LTD.

APPROVED	: NK. NINOMIYA	20211018	DRAWING NO.	EDC-000957-42-00
CHECKED	: NK. NINOMIYA	20211018	PART NO.	UG-913/U(42)
DESIGNED	: MT. KANEKO	20211018	CODE NO.	CL0302-0043-0-42
DRAWN	: NK. OOSHIMA	20211015		0 1/1

FORM HC0011-5-51