NO. P3E028

E	D	C	B	A	NO. of contacts
13.25 (0.522)	14 (0.551)	17 (0.669)	26.1 (1.028)	26.5 (1.043)	30
18.25 (0.719)	24 (0.945)	27 (1.063)	36.1 (1.421)	36.5 (1.437)	50
25.75 (1.014)	39 (1.535)	42 (1.654)	51.1 (2.012)	51.5 (2.028)	80
30.75 (1.211)	49 (1.929)	52 (2.047)	61.1 (2.406)	61.5 (2.421)	100
35.75 (1.408)	59 (2.323)	62 (2.441)	71.1 (2.799)	71.5 (2.815)	120

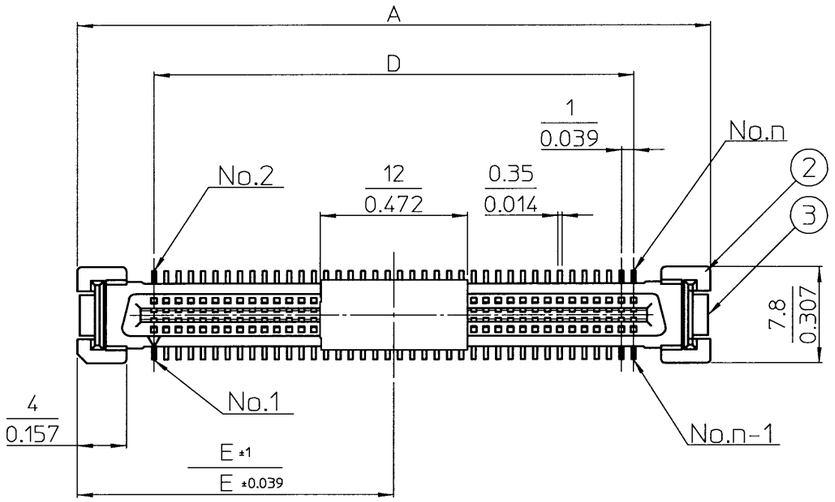

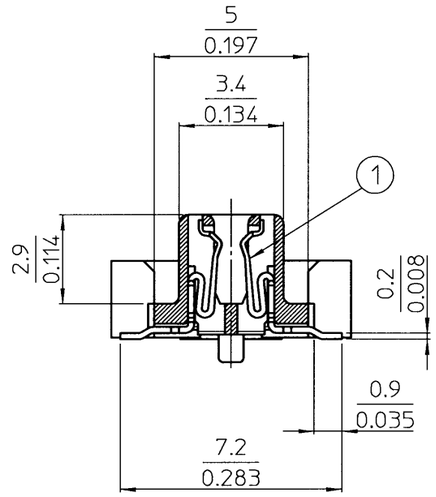

X-X' Cross-section(Scale 5:1)

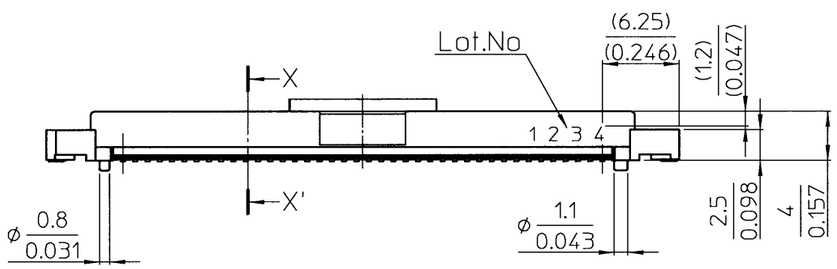

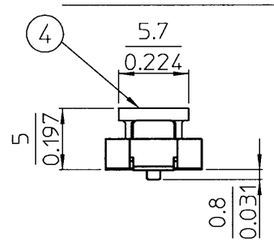

Notes
1)Dimensions are in millimeter.
2)Inch equivalents are in parentheses or below the metric dimension.
3)Unless otherwise specified, tolerance shall be:
Less than 10 ±0.2 (Less than 0.394 ±0.0079)
10 ~ 50 ±0.25(0.394 ~ 1.969 ±0.0098)
50 or more ±0.3 (1.969 or more ±0.0118)
4)Contacts Finish.
Under plating Nickel
Contact area Au 0.05μm or more
Tails Au 0.03μm or more
5)SMT Retention Clip Finish.
Under plating Nickel
Gold plating 0.03μm or more
6)The product represented here is 80 contacts' version.
7)A reference drawing of P.W.B.

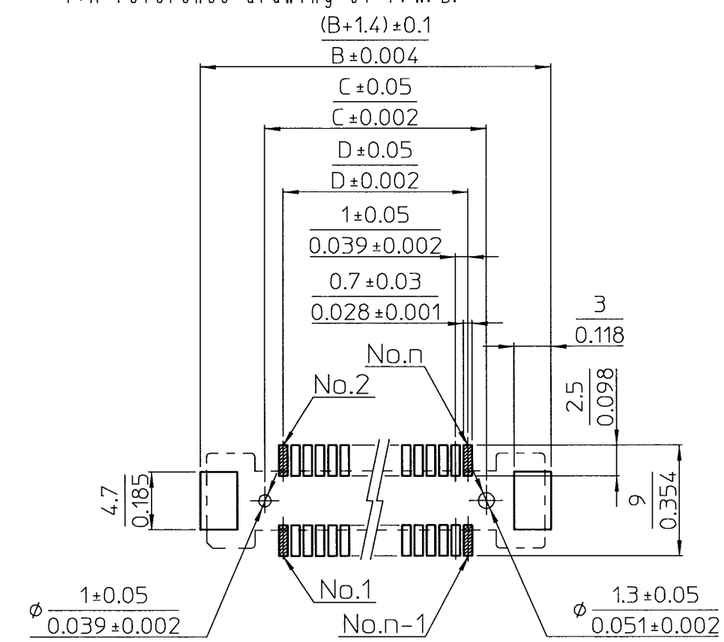

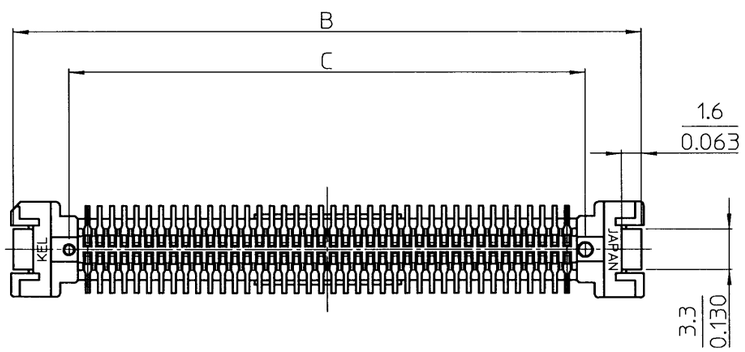

No.	Component	Quantity	Material	Finish
4	Pick up cover	1	Glass-filled Modified PA6T,UL94V-0,Bkack	———
3	SMT Retention clip	2	Copper alloy	SEE NOTE4
2	Insulator	1	LCP Glass-filled, UL94V-0, Off-white	———
1	Contact	No. of contact	Copper alloy	SEE NOTE4

REV.	DATE	APPROVED BY	CHECKED BY	DRAWN BY	DESCRIPTION
3	×				
2	×				
1	×				

THIRD ANGLE PROJECTION	DRAWN BY	DATE	CHECKED BY	DATE	APPROVED BY	DATE	SCALE
	D.Yamashita	May.27,2019	K.Tagai	May.27,2019	N.Sugita	May.27.2019	2:1

MATERIAL

FINISH

TITLE: 87BFN-□□□S-1F

KEL CORPORATION

DRAWING No. P3E028

REVISION 1