| REVISIONS | | | | | |
|---|---|---|---|---|---|
| ZONE | LTR | ECO | DESCRIPTION | DATE | APPROVED |
| | A | 19891 | RELEASED 7-8-75 MD | 9-10-75 | |
| | B | 22363 | DIMS: 1S: .367 WAS: .385<br>1S: .130 WAS: .135<br>NOTE 4: WAS: CONTACTS PER DWG 086-0000-0024 | 8.5.77 | |
| | C | | REV PER ECO 18-013901 CT | 11-18 | AS |

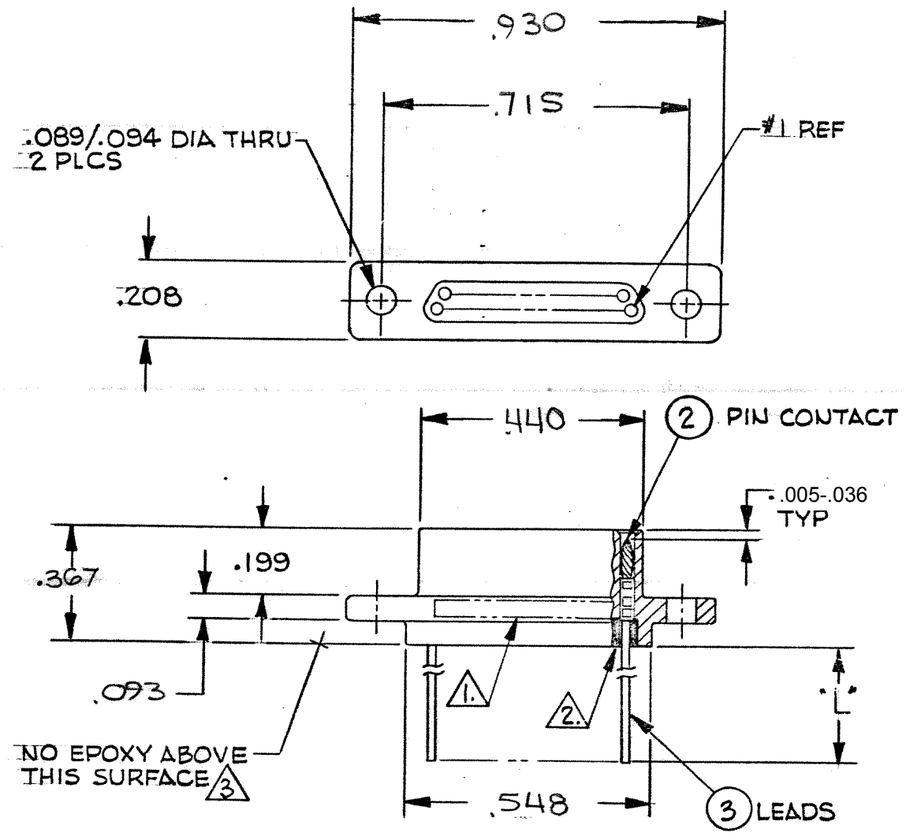


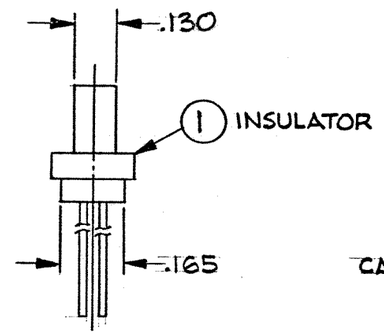


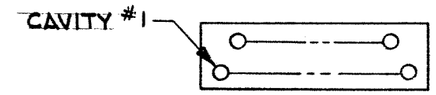


REAR VIEW OF PIN
CAVITY LAYOUT

NOTES:

1. MARK "MALCO" OR MALCO LOGO, PART NO. & DATE CODE WITH .047 MIN. HIGH CHARACTERS IN APPROX LOCATION SHOWN
2. EPOXY AS SHOWN WITH HYSOL #4215 AND #3561
3. EPOXY WICKING FROM THE REAR OF THE INSULATOR ON INSULATED LEADS MUST NOT EXCEED .125 MAX ON #25 AWG AND SMALLER LEADS AND .200 MAX ON #24 AWG AND LARGER LEADS
4. CRIMP LEADS INTO CONTACTS PER MEP 302-05

Tyco Dwg 8-1532148-1
Micro P/N 095-0000-0320

| QTY REQD | CODE IDENT | PART OR IDENTIFYING NO. | NOMENCLATURE OR DESCRIPTION |
|---|---|---|---|

PARTS LIST

UNLESS OTHERWISE SPECIFIED DIMENSIONS ARE IN INCHES
TOLERANCES ARE:
FRACTIONS ± 1/64 DECIMALS .XX ±.01 .XXX ±.005 ANGLES ±0°30'

MATERIAL

FINISH

| NEXT ASSY | USED ON |
|---|---|
| APPLICATION | |

DO NOT SCALE DRAWING

CONTRACT NO.

| APPROVALS | DATE |
|---|---|
| DRAWN M. DABROWSKI | 7-8-75 |
| CHECKED | |
| PR. ENG. | |
| APPD. | |

These drawings and specifications are the property of Microdot Inc., are issued in strict confidence and shall not be divulged, be reproduced or copied, or used as the basis for the manufacture or sale of any article without written permission of Microdot Inc.

MALCO
A MICRODOT COMPANY, INC.
220 PASADENA AVE., SO. PASADENA, CALIF. 91030

RACK AND PANEL CONN.
MCDG 3-15 P
SCREW MOUNTING

PROD. CODE 824
REV C

| SIZE | CODE IDENT NO. | DRAWING NO. |
|---|---|---|
| B | 98278 | 8-1532148-1 |

SCALE NONE SHEET 1 OF 1

CUSTOMER DRAWING

BISHOP GRAPHICS ACCUPRESS REORDER NO. 2197