THIS DRAWING IS UNPUBLISHED. RELEASED FOR PUBLICATION 2020
© COPYRIGHT 2020 BY Tyco Electronics Japan G.K. ALL RIGHTS RESERVED.

REVISIONS 改版

P	LTR	DESCRIPTION	DATE	DWN	APVD
	A	RELEASED	30JAN2020	AY	RK

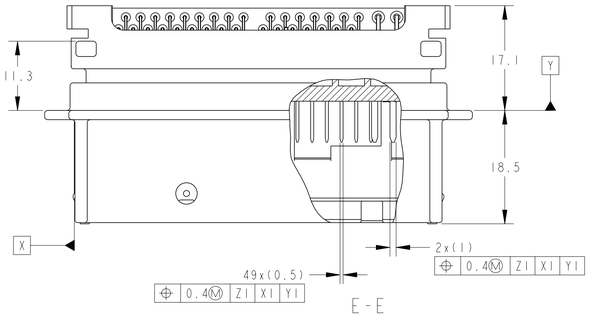

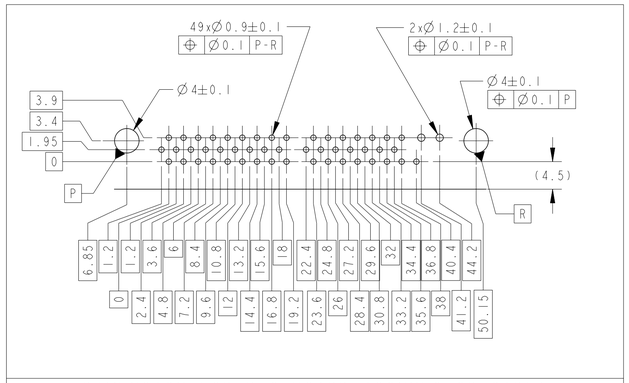

DIMENSION FOR P.C.BOARD (CONNECTOR SIDE)
プリント基板取付寸法(コネクタ取付側)

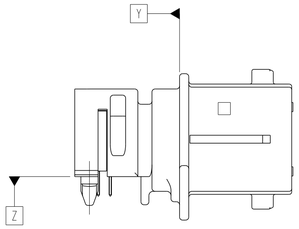

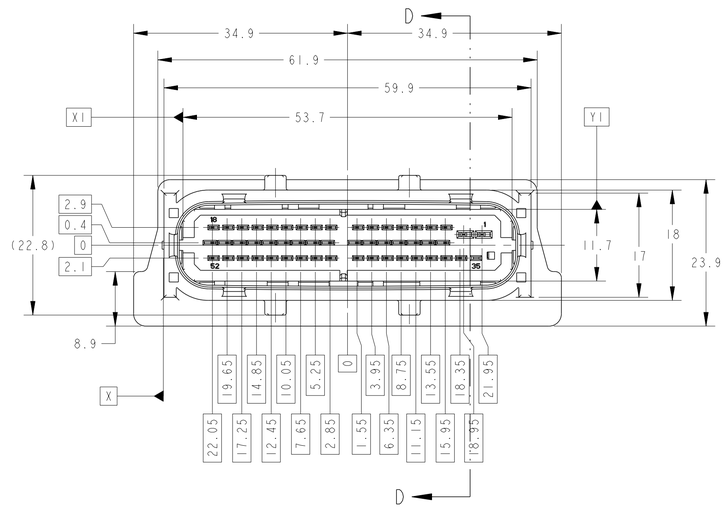

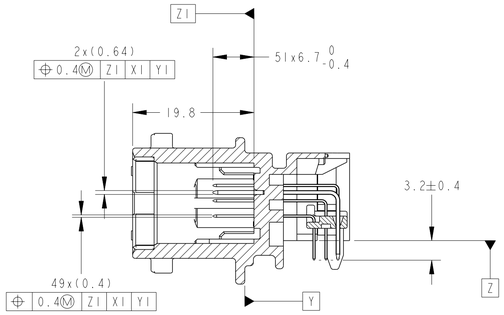

D-D

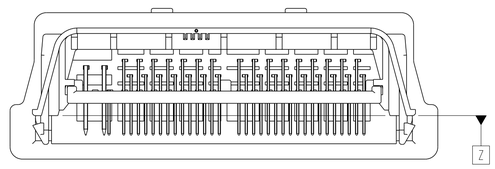

1.MAITNG PART NO.:2294689
2.THICKNESS OF APPLICABLE PRINTED CIRCUIT BOARD:1.2±0.19mm
3.TOLERANCE DEPENDS ON THE RESULT OF THE STATISTICAL METHOD.

1.嵌合相手品番:2294689
2.適用プリント基板厚:1.2±0.19mm
3. 公差は積率法検証結果による

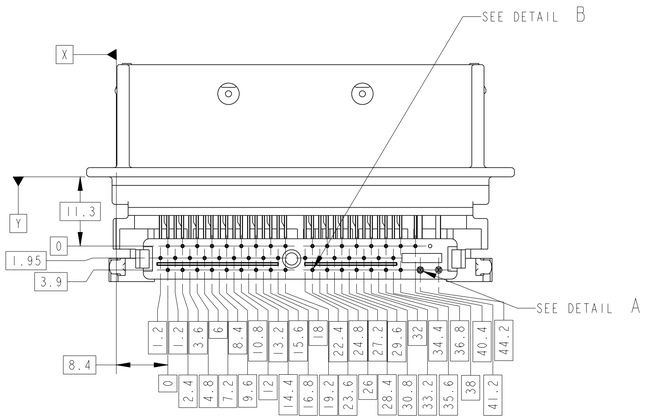

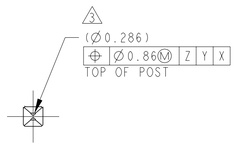

DETAIL A
SCALE 10:1
2PLC

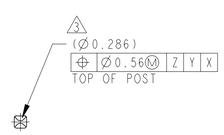

DETAIL B
SCALE 10:1
49PLC

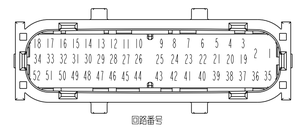

回路番号

SELECTIVE TIN (MATTE)	SELECTIVE TIN(BRT) (CIRCUIT NO.:1~34)	1.0 (CIRCUIT NO.:1,2)	PBT GF30	PBT GF30	BLACK	BLACK	2294355-1
	SELECTIVE GOLD (CIRCUIT NO.:36~52)	0.5 (CIRCUIT NO.:3~34,36~52)					
SOLDERING SIDE	CONTACT SIDE	TERMINAL	TINE PLATE	CAP HOUSING	TINE PLATE	CAP HOUSING	PART NUMBER
TERMINAL FINISH			MATERIAL		COLOR		

THIS DRAWING IS A CONTROLLED DOCUMENT.

DIMENSIONS: 寸法: 単位 mm

TOLERANCES UNLESS OTHERWISE SPECIFIED: 一般公差 ±0.3
~~0 PLC ±~~
~~1 PLC ±0.1~~
~~2 PLC ±0.01~~
~~3 PLC ±0.001~~
~~4 PLC ±0.0001~~
ANGLES ±3°00'

MATERIAL 材料: SEE TABLE
FINISH 仕上: SEE TABLE

DWN A.YAMAGUCHI 30JAN2020
CHK T.HAYASHI 30JAN2020
APVD R.KOMIYAMA 30JAN2020
PRODUCT SPEC 製品規格 108-140176
APPLICATION SPEC 取付適用規格 -
WEIGHT 重量 23 g

TE Connectivity

NAME 品名: 0.50/1.0 SEALED 51POS CAP ASSY

SIZE A1 | CAGE CODE 00779 | DRAWING NO 図番 C-2294355 | RESTRICTED TO -

CUSTOMER DRAWING | SCALE 尺度 2:1 | SHEET 1 OF 1 | REV A

4805 (3/13)